CHECK•LINE®

MODEL: TSCA-ZF

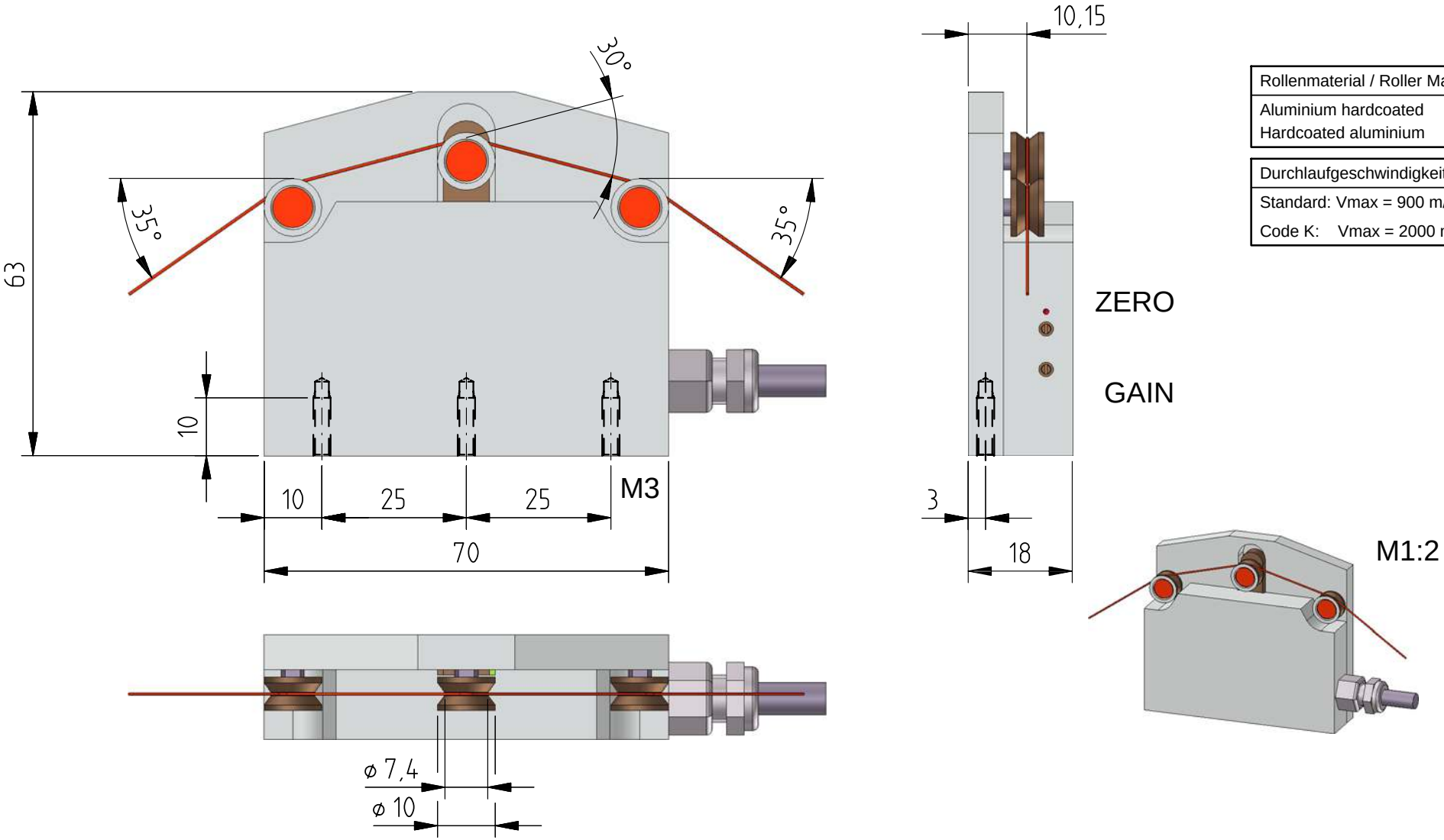

Rollenmaterial / Roller Material
Aluminium hardcoated Hardcoated aluminium

Durchlaufgeschwindigkeit / Line Speed
Standard: Vmax = 900 m/min
Code K: Vmax = 2000 m/min

ELECTROMATIC Equip't Co., Inc., 600 Oakland Ave, Cedarhurst, New York 11516 - USA

Tel: 800-645-4330 / 516-295-4300 **Fax**: 516-295-4399 **Web**: CheckLine.com **Email**: info@CheckLine.com